1928
K. N. Toosi University of Technology
Faculty of Materials Science and Engineering

AM2C-2026

3rd National & 1st International

AM2C 3D Printing Competition

Official Guidelines

Organizer:

AM2C Group, Faculty of Materials Science and Engineering,

K. N. Toosi University of Technology.

International Co-organizer and Host:

Nanotechnology and Multifunctional Structures Research Center (NMSRC),

Eastern Mediterranean University.

Website: am2c.kntu.ac.ir

August 2026

Contents

1. Introduction to the AM2C 3D Printing Competition 1
2. Objectives 2
3. Competition Structure 3
   3.1. Conventional Category 3
   3.2. Innovative Category 3
4. Participation Requirements and Competition Format 5
   4.1. Eligibility 5
   4.2. Competition Format 5
   4.3. Team Formation 5
   4.4. Required Documents 5
5. Competition Date and Venue 5
6. Competition Theme and Technical Regulations 6
   6.1 Technical specifications for the competition sample 6
   6.2 Design notes 8
   6.3 Technical report requirements 8
   6.4 Scoring and Evaluation Criteria 9

1. Introduction to the AM2C 3D Printing Competition

The AM2C Group, affiliated with the Faculty of Materials Science and Engineering at K. N. Toosi University of Technology (KNTU), proudly presents the **3rd National and 1st International AM2C 3D Printing Competition - AM2C 2026**.

This edition marks a major step forward in the evolution of AM2C, expanding the competition from a nationally recognized event into a truly international platform for scientific and engineering collaboration.

For the 2026 edition, the competition is jointly organized by two academic institutions:

- **K. N. Toosi University of Technology (KNTU), Tehran, Iran** *(Primary Organizer)*
- **Eastern Mediterranean University (EMU), North Cyprus** *(International Co-organizer and Host)*

Through this partnership, the competition will be held **across both venues**, enabling participation from Iran and from around the world. Participants, whether domestic or international, may freely submit their printed samples to **either KNTU or EMU**, ensuring equal accessibility for all teams and minimizing logistical constraints such as international shipping or customs limitations. Both venues follow a unified rulebook and identical testing and evaluation standards, guaranteeing fairness and scientific consistency.

With the rapid advancement of additive manufacturing (AM) technologies, the boundaries of engineering design and production continue to expand. 3D printing has progressed far beyond rapid prototyping to become a powerful method for producing functional, lightweight, and geometrically sophisticated components used in aerospace, biomedical engineering, automotive systems, energy applications, robotics, electronics, and the arts. By combining science, engineering, and creativity, this technology enables the fabrication of highly optimized structures that were previously impossible to manufacture.

The AM2C 3D Printing Competition provides a comprehensive platform for designers, engineers, and researchers worldwide to demonstrate their skills in structural design optimization and Fused Deposition Modeling (FDM) based additive manufacturing. This scientific, educational, and competitive event aims to elevate technical knowledge, promote creative engineering solutions, and strengthen collaboration between academia and industry, offering participants a complete design-to-manufacture experience.

Welcoming individuals from diverse academic, professional, and industrial backgrounds, AM2C fosters global knowledge exchange and cross-disciplinary innovation. The competition is open to all, regardless of age or educational background, inviting students, researchers, professionals, entrepreneurs, inventors, and artists to participate.

In this edition, the competition focuses exclusively on the FDM process. However, with the expansion enabled through the partnership with EMU, future editions will incorporate additional additive manufacturing technologies and specialized categories, further enhancing AM2C's role as an international platform for excellence in engineering, design, and advanced manufacturing.

2. Objectives

The AM2C 3D Printing Competition is designed to advance knowledge, creativity, and technical excellence in the field of additive manufacturing. By providing a unified scientific and engineering platform at both KNTU and EMU, the competition encourages participants to explore innovative solutions in structural design, materials engineering, and FDM-based fabrication.

The key objectives of the competition are:

1. **Promote Understanding of Modern Additive Manufacturing Technologies**

   To enhance participants' awareness of 3D printing processes, particularly FDM, and demonstrate their broad applications across engineering, biomedical, aerospace, automotive, energy, consumer products, robotics, and the creative industries.

2. **Strengthen 3D Design and Engineering Skills**

   To encourage the development of advanced CAD modeling skills, structural design strategies, and optimized material selection for producing lightweight, high-strength, and high-performance components.

3. **Foster Innovation, Creativity, and Problem-Solving**

   To promote innovative thinking in engineering design, encourage the use of topology optimization and lattice structures for lightweighting, and improve participants' ability to solve real-world mechanical and manufacturing challenges.

4. Enhance Collaboration and International Knowledge Exchange

To create a platform where students, researchers, industry professionals, and inventors can share knowledge, learn from each other, and collaborate across borders through the dual-host structure of KNTU and EMU.

5. Improve Technical Reporting and Analytical Skills

To strengthen participants' ability to prepare professional technical reports, conduct engineering analyses, interpret mechanical test data, and present results according to international academic and industrial standards.

6. Identify and Support Talent in Additive Manufacturing

To recognize emerging designers and engineers with outstanding skills in structural optimization, creativity, and AM based manufacturing, paving the way for future research, collaboration, and innovation.

3. Competition Structure

The Competition is organized into two distinct categories, allowing participants to demonstrate their design and engineering skills under different performance constraints. Both categories follow the same technical rulebook and evaluation standards at KNTU and EMU.

3.1. Conventional Category

In this category, participants must design and print a sample that meets the defined geometric specifications with a **minimum weight of 25 g (W ≥ 25 g)**. The emphasis in this category is on **achieving maximum tensile strength** while adhering to all design limitations (see Fig. 1).

3.2. Innovative Category

In this category, participants must design and print a sample that satisfies the same specifications but with a **maximum weight of 25 g (W ≤ 25 g)**. The focus is on **lightweighting through creative and optimized structural design**, encouraging the use of advanced techniques such as topology optimization and lattice structures. Achieving high strength-to-weight ratios is important (see Fig. 2).

NOTE: Participants may choose to compete in **one or both categories**, as each entry will be evaluated independently.

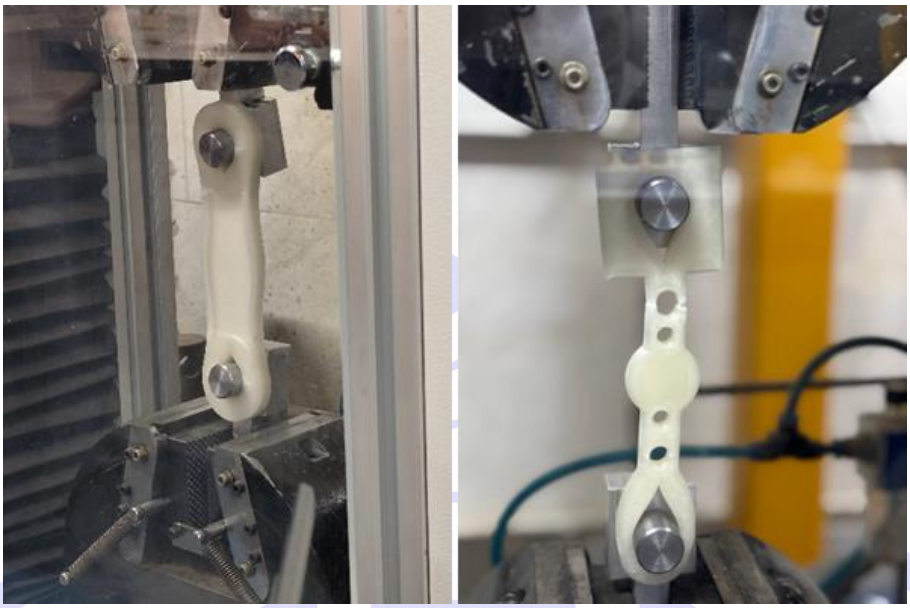

Fig. 1. Approved samples for participation in the conventional category.

Fig. 2. Approved samples for participation in the Innovative category.

4. Participation Requirements and Competition Format

4.1. Eligibility

The competition is open to the general public. Individuals from any academic, professional, or industrial background may participate, including students, researchers, engineers, designers, professionals, inventors, and enthusiasts.

4.2. Competition Format

The competition will be conducted in a **remote submission format**. Each team must submit their printed sample and all required documentation. Participants may submit samples to **either KNTU (Iran)** or **EMU (North Cyprus)** at their discretion. There is **no restriction** for domestic or international teams, samples may be sent to either host site. Participants who wish to **attend in the competition in person** may coordinate with KNTU or EMU in advance. For international teams unable to travel or ship to Iran, EMU provides a fully equipped testing facility that follows the exact same standards as KNTU.

4.3. Team Formation

Teams may register as individuals or in groups of up to **five members**. Interdisciplinary teams (mechanical engineering, materials science and engineering, industrial design, etc.) are encouraged, as diverse expertise can improve design quality. Teams may also designate **one supervisor** as an additional (sixth) member, if applicable.

4.4. Required Documents

At the time of registration, participants must submit:

- a copy of national ID or passport

5. Competition Date and Venue

- **Submission Deadline:** 5 December 2026.
- **Competition Date:** December 2026 (The exact date will be announced!).

- **Competition Venues:**

  - ✓ Faculty of Materials Science and Engineering, K. N. Toosi University of Technology, No. 7, Pardis St., Mollasadra Ave., Vanak Sq., Tehran, Iran. Postal Code: 19919-43344.

  - ✓ Nanotechnology and Multifunctional Structures Research Center (NMSRC), Department of Mechanical Engineering, Eastern Mediterranean University, North Cyprus via Mersin 10, 99628, Türkiye.

The competition will be held **concurrently at both venues**, with possible minor time differences depending on logistical factors.

Participants may freely choose either venue for sample submission and testing.

6. Competition Theme and Technical Regulations

The theme of AM2C 2026 is the design and FDM-based fabrication of a lightweight yet mechanically strong component. Participants must use their engineering knowledge and creativity to design a structure that maximizes tensile strength while minimizing weight. All submitted samples will undergo a tensile test. Only samples that fully comply with the regulations will qualify for testing.

6.1 Technical specifications for the competition sample

All samples must comply with the following constraints:

- Maximum Length: **180 mm**
- Maximum Width: **50 mm**
- Maximum Thickness: **10 mm**
- Both ends must include a circular hole with a diameter of **20 ± 0.1 mm** for mounting on the tensile testing fixture (Fig. 3). The center of each hole must be 20 mm from the edge of the sample.
- No adhesives or mechanical fasteners are allowed.
- Maximum Infill: **80%**

- Maximum Top/Bottom Layers: **5**
- Allowed Filaments: **PLA, ABS, or PETG (single-material only)**
- Composite filaments **<u>are not allowed</u>**
- Multi-material prints **<u>are not allowed</u>**
- Participants must provide at least 10 cm of the filament used for printing, along with its datasheet, for verification.
- Dimensions of the holes and their positions **<u>must not be altered</u>**.

✓ Samples that do not meet these criteria <u>will be disqualified</u>.

✓ Hook-shaped metallic fixture of the tensile testing machine is shown in Fig. 3-a.

✓ An example of an acceptable sample for participation in the competition is shown in Fig. 3-b.

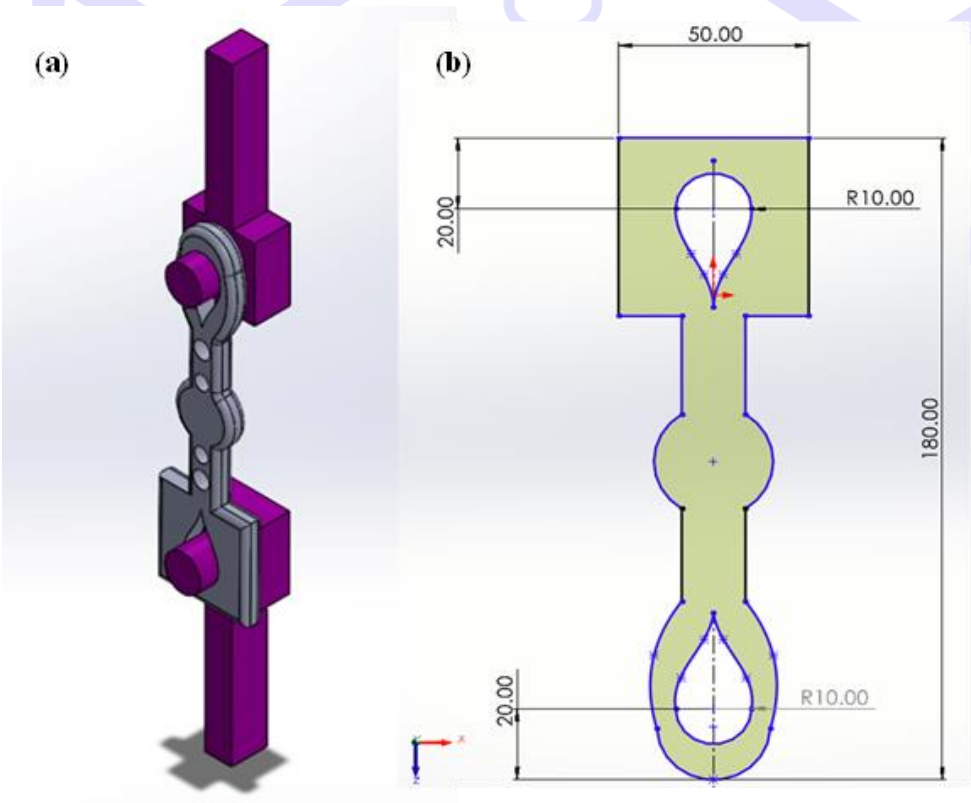

Fig. 3. Schematic of (a) metallic fixture of the tensile testing machine and (b) dimension of an acceptable sample.

6.2 Design notes

Participants are encouraged to:

- Use **topology optimization** tools to minimize weight
- Employ **lattice or cellular structures** (honeycomb) where appropriate
- Carefully choose the **build orientation** relative to the tensile loading direction
- Select high-quality filament and proper printing parameters
- Ensure optimal printing conditions to avoid defects

6.3 Technical report requirements

Each team must submit a complete technical report including the following elements:

- **Title Page**: Team name, team members with their affiliation.
- **Abstract**: A concise summary (≤ 200 words) of the project, including the objective, methodology, and key findings.
- **Introduction and Objectives**: Background of the design concept, engineering considerations, and rationale for selecting materials/process parameters.
- **Materials and Methods**: A description of the filament used, the 3D printer model, and the printing parameters.
- **Design and Manufacturing Process**: Detailed explanation of the design process, including any challenges and decisions made during the design phase.
- **Results and Discussion**: A detailed analysis of the tensile test data and any software simulations, such as Abaqus. This section should also include an interpretation of the results and their implications.
- **Conclusions and Recommendations**: A summary of the results, key takeaways, and suggestions for future work or design improvements.
- **References**: A list of all references used in the preparation of the report, following proper citation standards.

6.4 Scoring and Evaluation Criteria

The primary metric used for evaluation is the **K-index**, defined as:

$$K = \frac{F_{Max}}{W}$$

where:

- $\mathbf{F_{Max}}$ is the maximum tensile force
- **W** is the weight of the component.

Scoring Breakdown:

- **K-index: 90 points**
  - ✓ Higher K-index = higher score
  - ✓ In case of a tie, the lighter sample ranks higher
- **Technical Report Quality: 10 points**
  - ✓ Clarity, completeness, engineering reasoning, analysis

Selection of Winner

a) In each category, the **top 10% of teams** (based on total score) will be selected as winners

b) At least **one winner per category** will be announced, even if participant count is low

Winners will be announced on December 2026, and official certificates and prizes will be awarded.

Send Your Samples to these Addresses:

1928
K. N. Toosi University of Technology
Faculty of Materials Science and Engineering

Advanced Materials and Nanotechnology research Lab, Faculty of Materials Science and Engineering, K. N. Toosi University of Technology, No. 7, Pardis St., Mollasadra Av., Vanak Sq., Tehran, Iran.
Postal Code: 19991-43344

Nanotechnology and Multifunctional Structures Research Center (NMSRC), Department of Mechanical Engineering, Eastern Mediterranean University, North Cyprus via Mersin 10, 99628, Türkiye.

We wish all participants the best of luck and look forward to seeing your innovative designs and solutions!